THIS DRAWING AND SPECIFICATIONS ARE THE PROPERTY OF THE PERFORMANCE WINDOW GROUP. THEY ARE ISSUED IN STRICT CONFIDENCE AND SHALL NOT BE REPRODUCED, COPIED OR USED AS THE BASIS FOR MANUFACTURING WITHOUT WRITTEN PERMISSION.

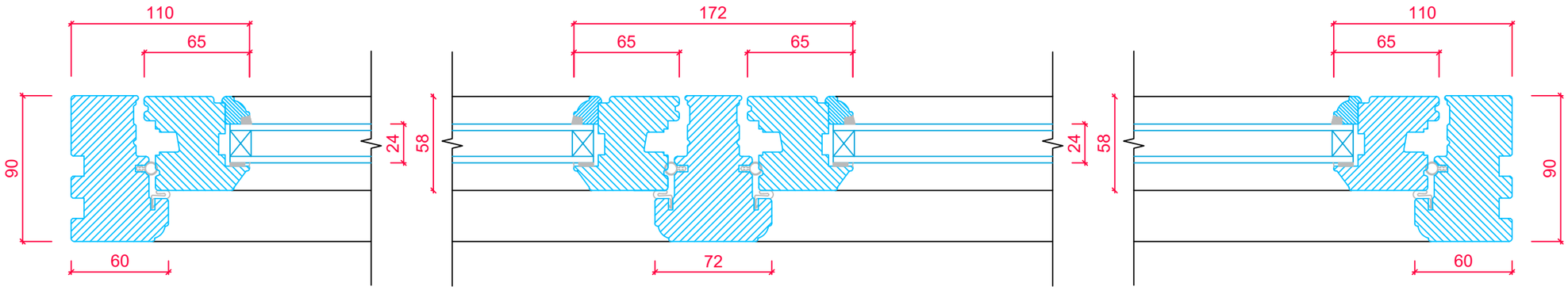

FRAME CROSS SECTION 'A-A'

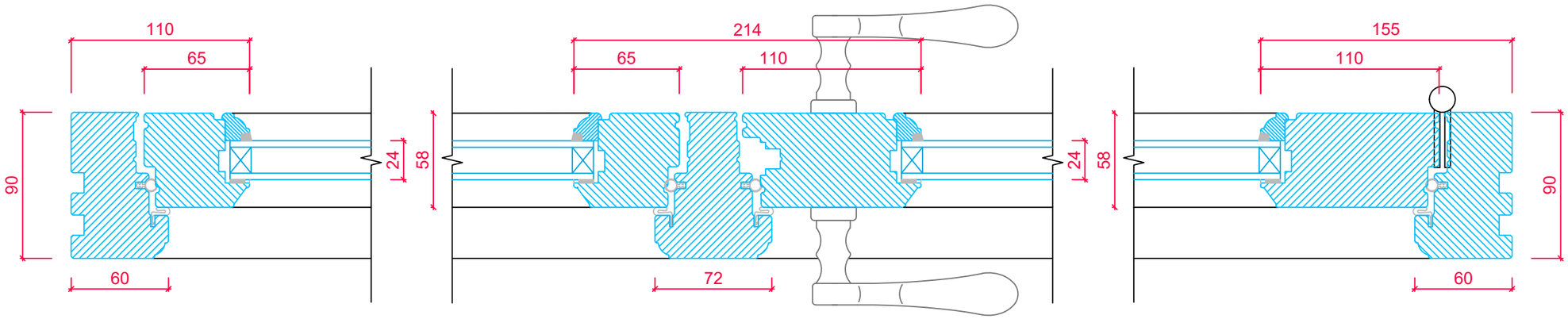

FRAME CROSS SECTION 'B-B'

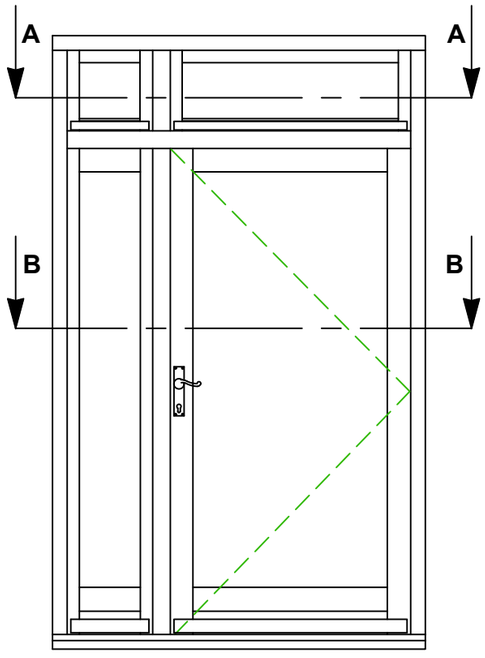

TYPICAL FRAME LAYOUT WITH SIDELIGHT AND TOPLIGHT

TIMBER WINDOWS EST. 2004

TOLERANCES *UNLESS OTHERWISE SPECIFIED*	PRODUCT RANGE: ENTRANCE DOOR - OPEN IN (Ovolo) 24mm Unit
ALL DIMENSIONS IN MM ALL LINEAR DIMENSIONS ±0.4 ALL ANGLE DIMENSIONS ±0.5° BREAK ALL SHARP EDGES 0.5	TITLE: HORIZONTAL SECTION DETAIL - WITH SIDELIGHT AND TOPLIGHT Rev B
	DRAWN BY: LH | DATE DRAWN: 01/03/2017 | SCALE: 1:3, 1:25

ALL MEASUREMENTS ARE FINISHED DIMENSIONS IN MM. DO NOT SCALE DRAWING! Din A3